REV.	DESCRIPTION	DRAWN	DATE
1	INITIAL RELEASE	FROS	2023/12/27

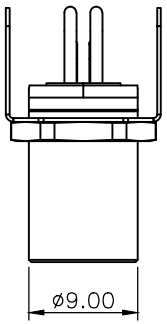

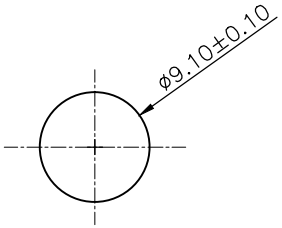

RECOMMENDED PANEL CUT

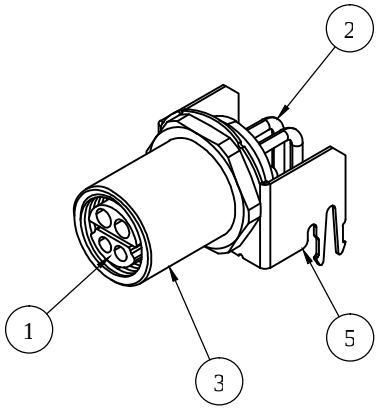

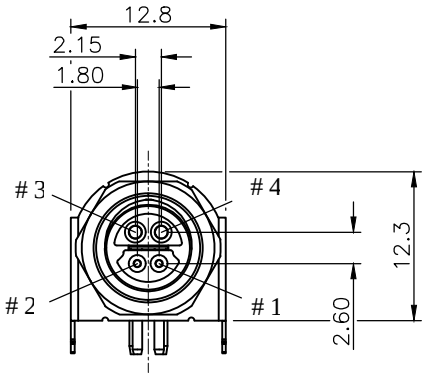

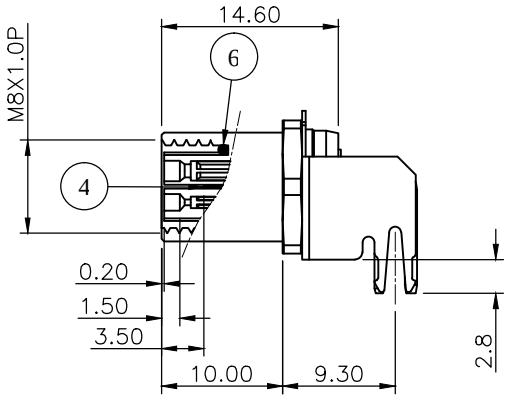

SPECIFICATION: (IEC 63171-6 Edition 2.0)

1. ELECTRICAL
1.1 Current Rating: Pin 1&2 4A, Pin 3&4 8A
1.2 Voltage Rating: 60VDC
1.3 Contact Resistance: 20mΩ max.
1.4 Shell Resistance: 100mΩ max.
1.5 Insulation Resistance: 500MΩ
1.6 Voltage Proof: 1000VDC (contact to contact), 2250VDC (contact to ground)

2. MECHANICAL
2.1 Durability: 100 Cycle
2.2 Insertion Force: 50N max.
2.3 Pull Out Force: 50N max.

3. ENVIRONMENTAL
3.1 Operating temperature range: -40°C~+85°C
3.2 Storage temperature range: -40°C~+85°C

4. SOLDER ABILITY
4.1 Recommended IR Reflow(Wave Soldering) Temperature: 260°C

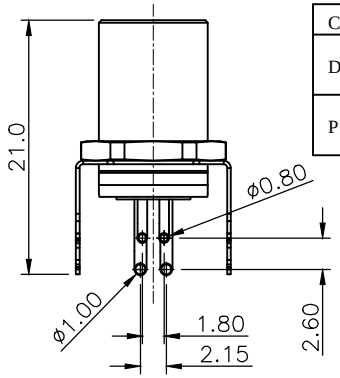

Contacts	Pin No.	Signal
DATA	1	BI_DA+
	2	BI_DA-
POWER	3	+
	4	–

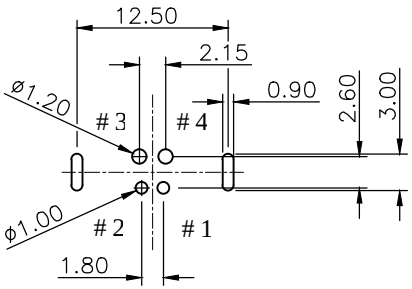

RECOMMENDED PCB LAYOUT (TOP VIEW)
GENERAL TOLERANCE: ±0.05mm

NO.	PART NAME	DESCRIPTION
6	ORING	Silicone
5	GROUND	Phosphor Bronze, nickel plating
4	SHIELD	Phosphor Bronze, nickel plating
3	SHELL	Brass, nickel plating
2	CONTACT	Brass, 30u" gold plating
1	HOUSING	LCP, UL94V-0, Black

UNLESS OTHERWISE SPECIFIED TOLERANCE

UNIT:	DECIMAL	LINEAR	ANGLES
mm	X.	±0.50	±5°
	X.X	±0.25	±3°
	X.XX	±0.12	±1°

ATTEND
www.attend.com.tw

DRAWN	Fros	2023/12/27
CHECKED	Tim	2023/12/27
APPROVED	Ken	2023/12/27

DRAWN NAME: SPE M8 4 Pin Hybrid Jack, R/A, w/GND, 30u" 8A

PRODUCT NO.	229B-R003
FILE NAME	229B-R003_B_1

SCALE	SHEET	SIZE
1.6	1/1	A4